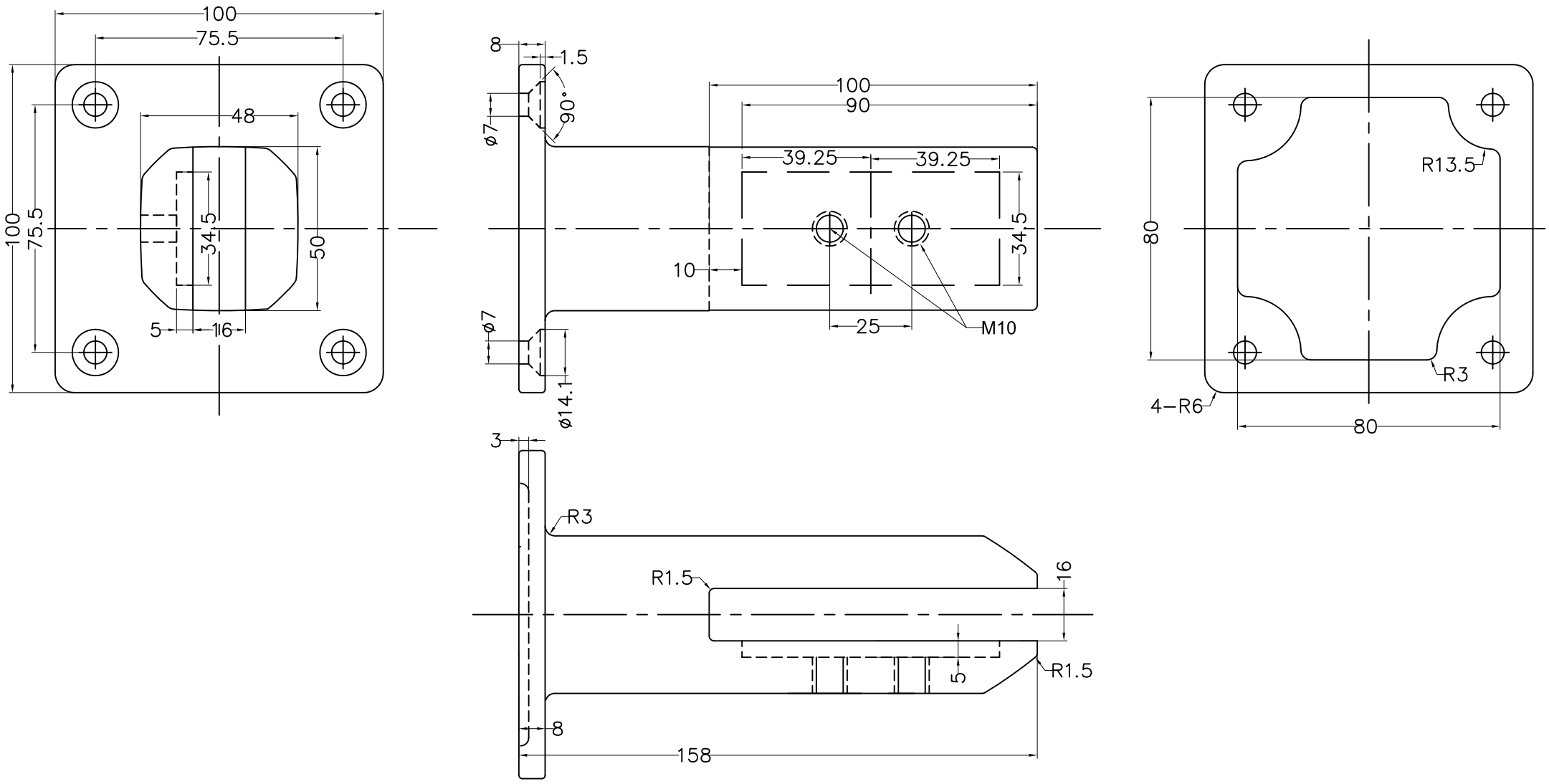

UNLESS OTHERWISE SPECIFIED: DIMENSIONS ARE IN MILLIMETERS SURFACE FINISH: TOLERANCES: LINEAR: ANGULAR:	FINISH:				DEBUR AND BREAK SHARP EDGES	
	NAME	SIGNATURE	DATE			TITLE: F30BPS
DRAWN	TTA		2010-03-16			
CHK'D						
APPV'D						
MFG						
QA				MATERIAL: s/s316L		DWG NO. A4
DO NOT SCALE DRAWING		REVISION		WEIGHT:		SCALE:01 SHEET 1 OF 1